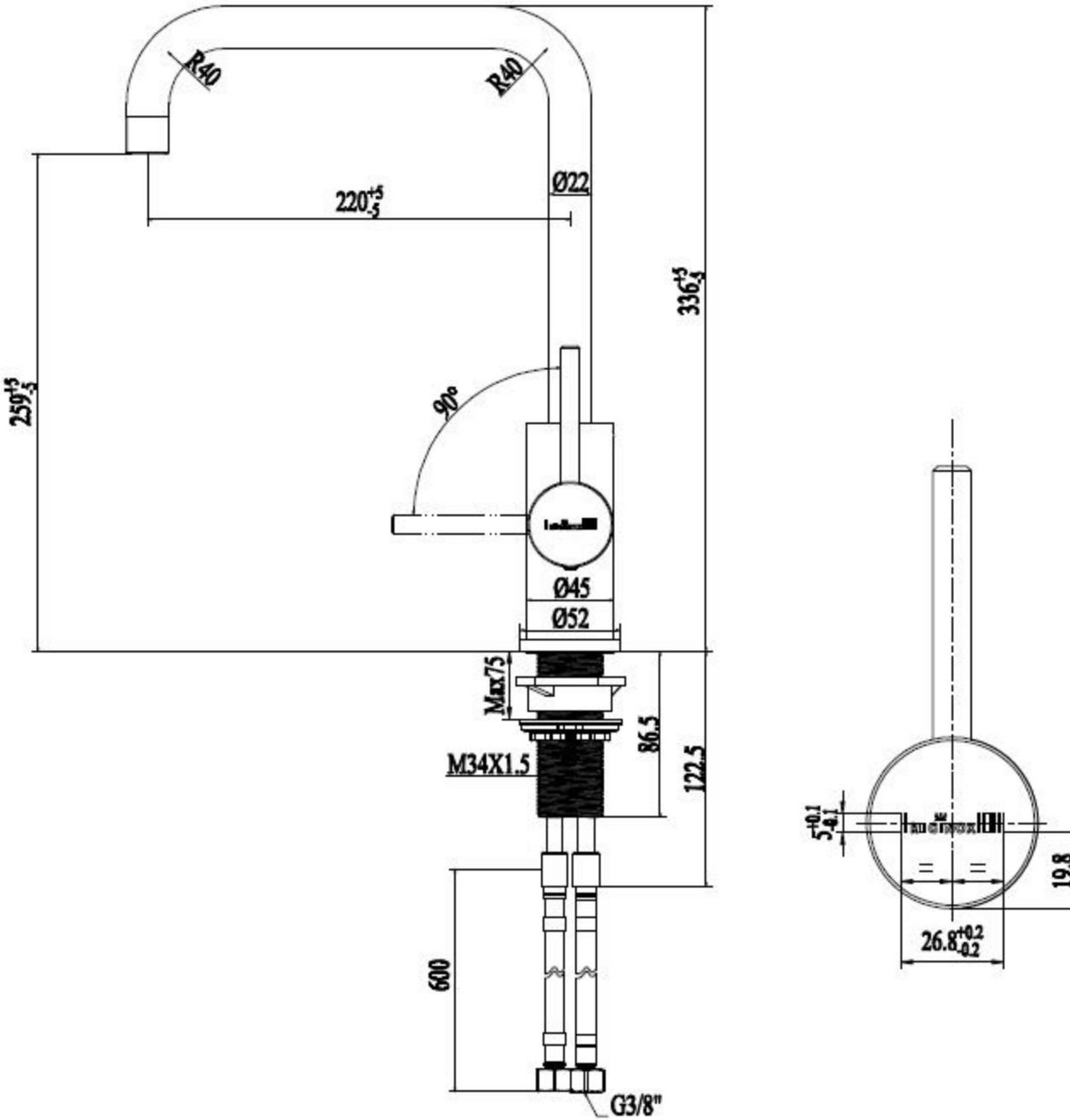
R40
R40
Ø22
220+5 -5
336+5 -5
259+5 -5
90°
Ø45
Ø52
Max75
86.5
122.5
M34X1.5
600
G3/8"
5+0.1 -0.1
19.8
26.8+0.2 -0.2