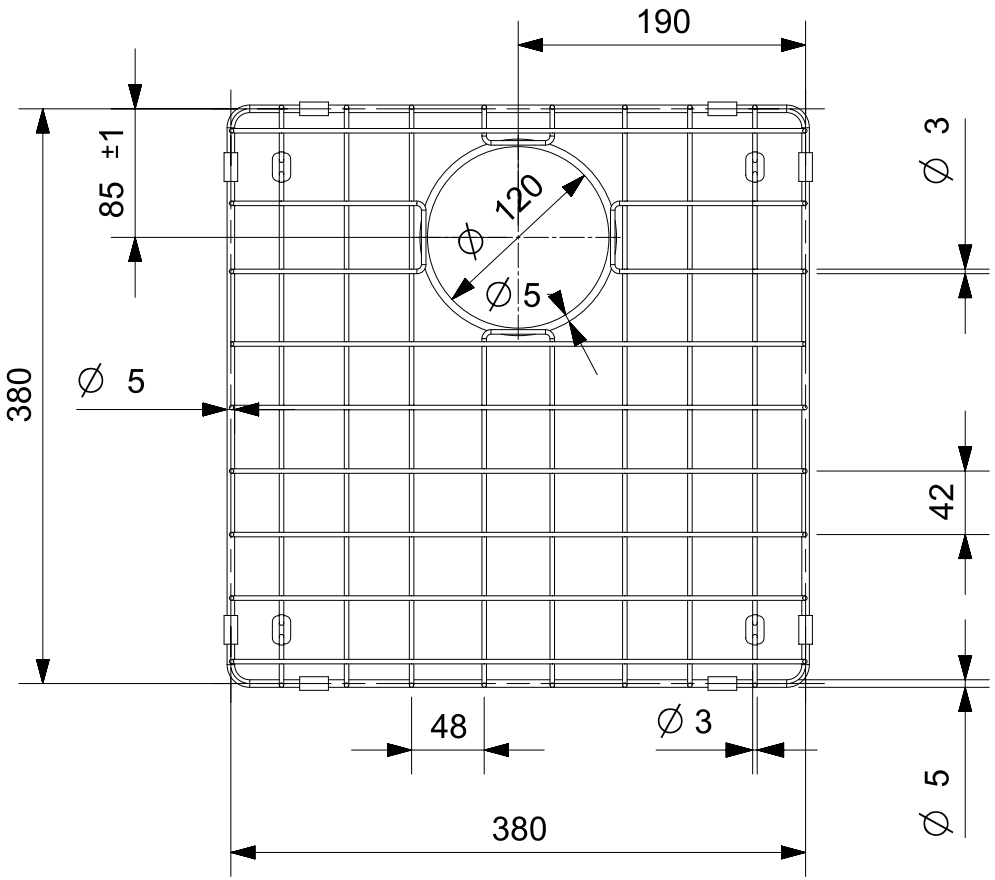

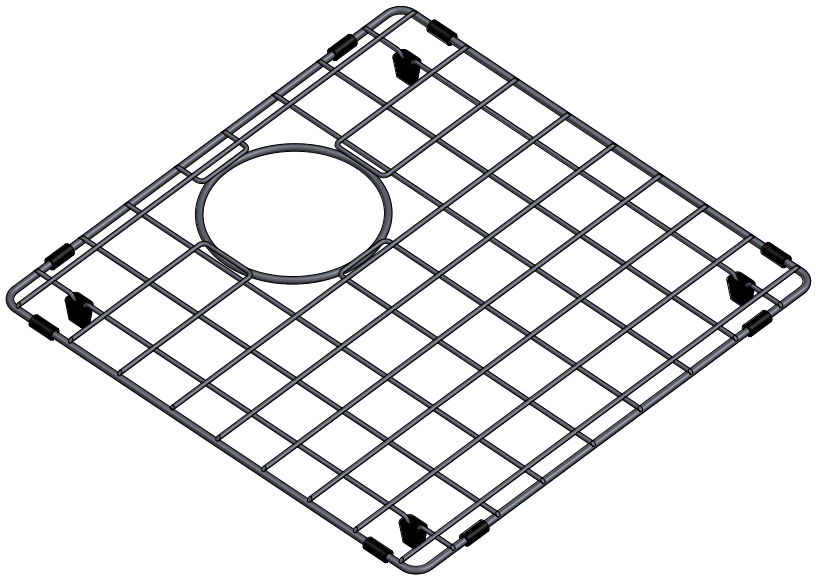

Bodemrek 40x40 Comf. Gun Metal II

R38857

Date: 24-05-2024